Model SDX™
Single Disc
Wafer Check Valve
External Spring & Lever

Features

- **Inlet Port** – The angular shape of the inlet port accelerates the line media through the valve
- **Conical Disc** – The disc's angle and convex profile allows fluid to travel faster around the disc, creating lift. The velocity above the disc is higher than the velocity below, which also creates lift.
- **External Spring & Lever Assembly** – May be provided in Right- or Left-Hand configuration

Design
Eternal Spring & Lever

- The adjustable tension Spring provides additional external force to assist closure. The addition of an external Lever allows manual operation of the valve disc, for example, in back flush applications.
- The adjustable tension Spring & Lever allow setting of precise cracking pressure specifically for your application.
- The Lever arm provides a visual indication of disc position.

Selection Chart

Size	Body	Disc	Seals	ASME Class
2" - 24"	316 SS (ASTM A351 CF8M)	316 SS	Integral Metal (except Ductile Iron) Buna-N EPDM Viton® Teflon® Others POA	150
	Carbon Steel (ASTM A216, Gr. WCB)	316 SS		
	Ductile Iron (ASTM A395 Gr. 60-40-18)	304 SS		

Parts Description

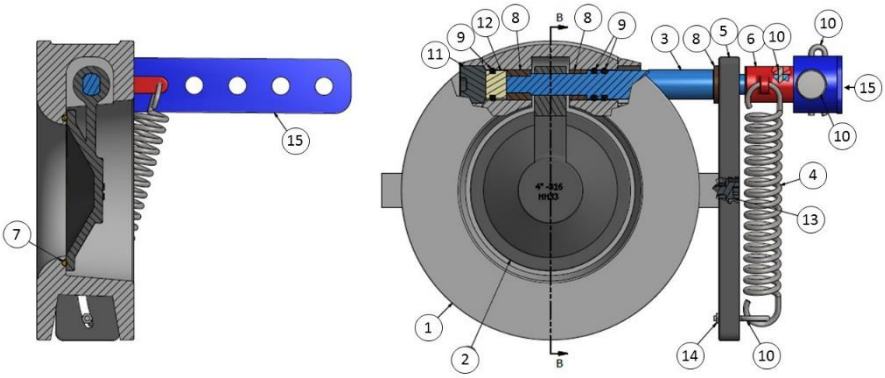

Component	Material	Component	Material
(1) Body	DI or CS or 316 SS	(9) O-Ring	Rubber
(2) Disc	304/316 Stainless	(10) Pin	Stainless Steel
(3) Shaft	316 Stainless	(11) Plug	Body Material
(4) Spring	Stainless Steel	(12) Gasket	Nylon
(5) Bracket	Carbon Steel	(13) Set Screws	Alloy Steel
(6) Spring Adapter	Stainless Steel	(14) Nut	Alloy Steel
(7) Seat	Rubber	(15) Lever Arm	Ductile Iron
(8) Bushing	Bronze		

Note: Optional component materials may be available.

Model SDX™ Single Disc Wafer Check Valve

External Spring & Lever

Figure Number Information

Order Example: *Specifications for 10" Champion Valves Single Disc Wafer Check Valve Style SDX, ASME Class 150, 316 Stainless Steel Body with 316 Stainless Steel Disc; Buna-N Seat; 316 Stainless Steel Spring; Plain Face End Connection; Right-Hand External Spring & Weight*

SIZE	MODEL	PRESSURE CLASS		BODY	DISC	SEAT	SPRING		END CONNECTION	ACCESSORY
10	SDX	15	-	S	S	B	S	-	P	2

ORDER SYMBOL	SIZE
2	2"
3	3"
4	4"
6	6"
8	8"
10	10"
12	12"

ORDER SYMBOL	MODEL
SDX	Single Disc Wafer

PRESSURE CLASS	ORDER SYMBOL
150	15
300	30
600	60

BODY & DISC	B/D	ORDER SYMBOL	SPECIFICATION
Carbon Steel	B	C	ASTM A216 Gr. WCB
Ductile Iron	B	L	ASTM A395 Gr. 60-14-18
316 Stainless Steel	B/D	S	ASTM A351 Gr. CF8M
304 Stainless Steel	D	T	ASTM 351 Gr. CF8

ORDER SYMBOL	SEAT	OPERATING TEMPERATURE			
		°C		°F	
		MIN	MAX	MIN	MAX
B	Buna-N	-57	120	-70	250
E	EPDM	-18	135	0	300
H	Silicone	-40	204	-40	400
L	Stellite®	-40	204	-40	400
N	Neoprene®	-40	120	-40	250
P	Integral Metal	-40	204	-40	400
S	316 SS	-40	204	-40	400
T	Teflon®	-40	149	-40	300
V	Viton®	-40	204	-40	400

ORDER SYMBOL	SPRING	OPERATING TEMPERATURE	
		°C	°F
S	316 SS	260	500

ORDER SYMBOL	END CONNECTION
P	Plain Face
R	Serrated Raised Face

ORDER SYMBOL	ACCESSORY
1	Right-Hand External Spring
2	Right-Hand External Spring & Weight
3	Right-Hand External Spring & Lever
4	Left-Hand External Spring
5	Left-Hand External Spring & Weight
6	Left-Hand External Spring & Lever

Ratings and Dimensions

Dimensions

ID		Face to Face	
NPS/IN	DN/MM	IN	MM
2	50	1 ¾	44.45
3	80	2	50.80
4	100	2 ¼	57.15
6	150	2 ¾	152.40
8	200	2 ⅞	203.20
10	250	3 ⅛	254.00
12	300	3 ½	304.80

SDX Lever Information

Valve Size	Lever Weight (LBF)	Cracking Pressure (PSI)
2"	0.227	0.50
3"	0.227	0.35
4"	0.227	0.29
6"	2.209	0.46
8"	2.209	0.33
10"	2.755	0.33
12"	2.755	0.29

Approximate weight and dimensions.
Apply for certified drawings

Quality System

Champion Valves, Inc. is dedicated to the goal of total quality management to provide industry-best products and services to our customers.

Certified System™ SAI GLOBAL ISO 9001 Quality

Champion Valves Inc™
P. O. Box 12901, Wilmington, NC 28405
Phone: 910-794-5547
FAX: 910-794-5581
E-Mail: Sales@WaferCheck.com
www.wafercheck.com

© 2015 Champion Valves, Inc.
CVI-SDX-LDS 06.2015 PRELIMINARY
Printed in the USA